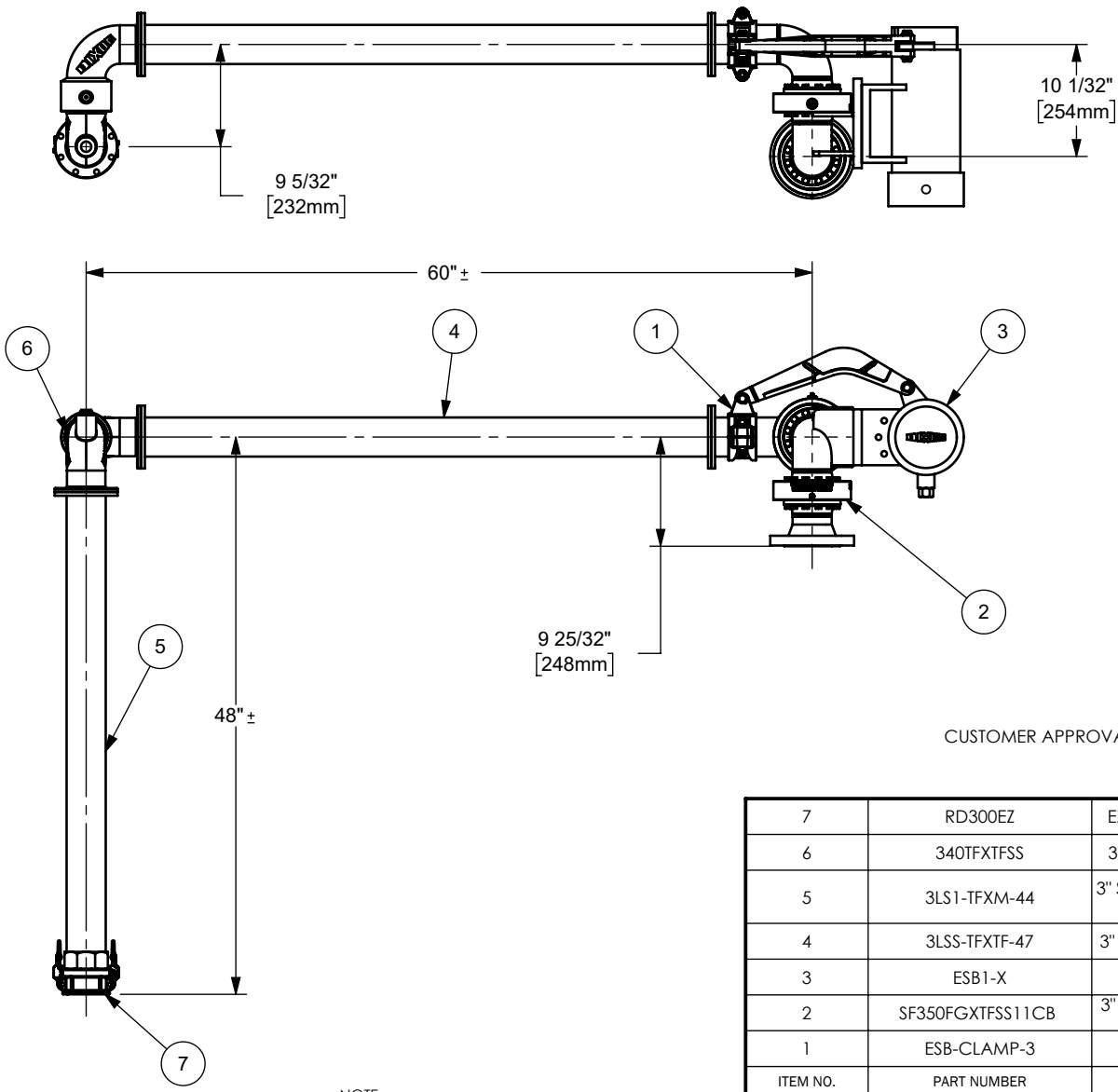

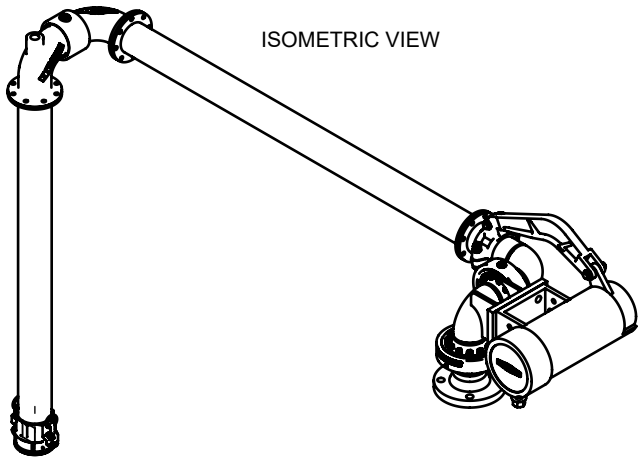

CUSTOMER APPROVAL: _____ DATE: _____

ITEM NO.	PART NUMBER	DESCRIPTION	MATERIAL	QTY.
7	RD300EZ	EZ BOSS-LOCK CAM & GROOVE TYPE D	STAINLESS STEEL	1
6	340TFXTFSS	3" STYLE 40 SWIVEL WITH TTMA FLANGES	STAINLESS STEEL	1
5	3LS1-TFXM-44	3" SCHEDULE 10 PIPE WITH TTMA FLANGE X 3" MALE NPT	STAINLESS STEEL	1
4	3LSS-TFXTF-47	3" SCHEDULE 40 PIPE WITH TTMA FLANGES	STAINLESS STEEL	1
3	ESB1-X	COUNTERBALANCE	-	1
2	SF350FGXTFSS11CB	3" SPLITFLANGE STYLE 50 SWIVEL WITH 150 lbs. X TTMA WITH CB	STAINLESS STEEL	1
1	ESB-CLAMP-3	3" CLAMP	IRON	1

NOTE:
Loading arms have been designed to work in a set range of motion and calculated to balance the provided equipment. If additional items are installed (such as tie-down chains, drip buckets, valves, vapor hoses etc.) it will adversely affect the balance and range of the loading arm. All loading arms are custom made to order and are not returnable, however Dixon is committed to providing a solution to any unforeseen issue.

DIXON
The Right Connection™
dixonvalve.com

DO NOT SCALE THIS DRAWING

DIXON U.S.A.
THE RIGHT CONNECTION ™

TITLE: 3" RIGHT HAND LOADING ARM ASSEMBLY

MATERIAL: SEE BOM

PART NUMBER: **A30909S31523005**